DocuSign Envelope ID: E3EC837A-DCE7-4E39-A3A1-5D74A04A69E3

PROJECT REFERENCE NO.	SHEET NO.
14SP.2022.1.1/14SP.2022.1.2	2A-1
ROADWAY DESIGN ENGINEER	PAVEMENT DESIGN ENGINEER
NORTH CAROLINA PROFESSIONAL SEAL 26960 ENGINEER — DocuSigned by: Kelly Lynchmyer, PE, Senior Project Manager, Mc Scale, PE — 11/4/2016	NORTH CAROLINA PROFESSIONAL SEAL 20134 ENGINEER — DocuSigned by: Kelly M. Bass, PE, Senior Project Manager, Mc Scale, PE — 11/4/2016

DOCUMENT NOT CONSIDERED FINAL UNLESS ALL SIGNATURES COMPLETED

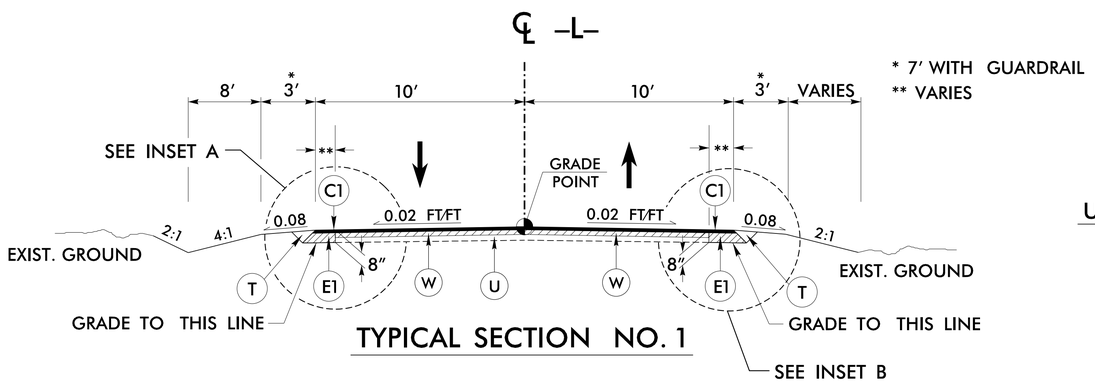

* 7′ WITH GUARDRAIL
** VARIES

TYPICAL SECTION NO. 1

USE TYPICAL SECTION NO. 1

–L– STA. 13+00 TO –L– STA. 15+32
–L– STA. 16+00 TO –L– STA. 17+55
–L– STA. 18+60 TO –L– STA. 21+65
–L– STA. 22+30 TO –L– STA. 24+50

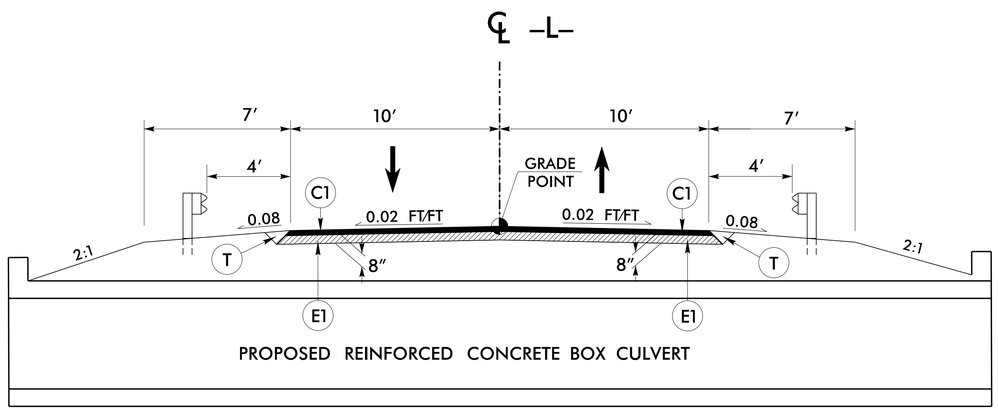

TYPICAL SECTION NO. 2

USE TYPICAL SECTION NO. 2

–L– STA. 15+32 TO –L– STA. 16+00
–L– STA. 21+65 TO –L– STA. 22+30

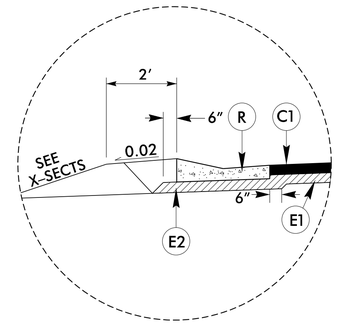

INSET A

–L– STA. 16+90 TO –L– STA. 18+83 LT

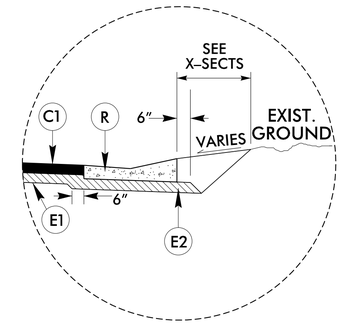

INSET B

–L– STA. 16+37 TO –L– STA. 18+83 RT

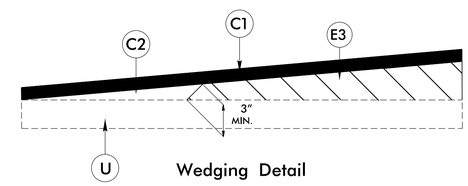

Wedging Detail

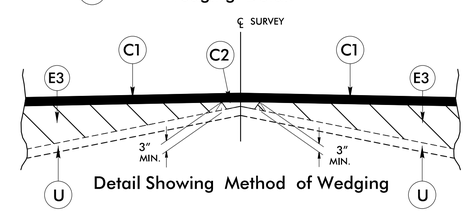

Detail Showing Method of Wedging

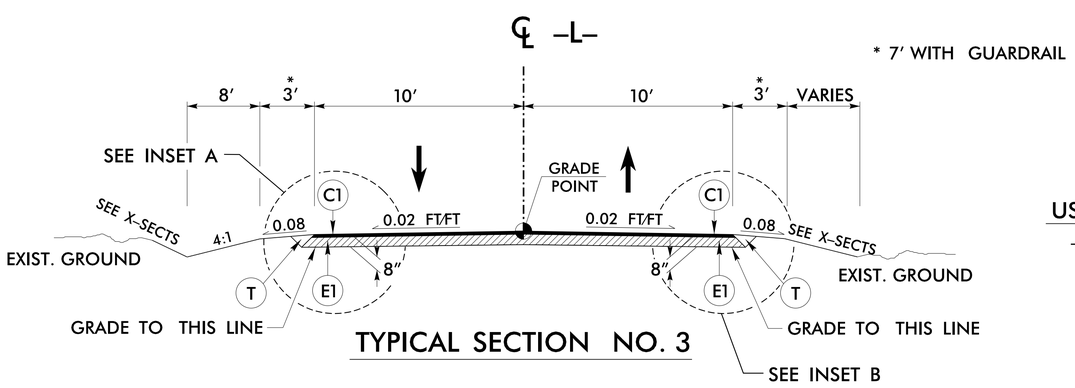

* 7′ WITH GUARDRAIL

TYPICAL SECTION NO. 3

USE TYPICAL SECTION NO. 3

–L– STA. 17+55 TO –L– STA. 18+60

	PAVEMENT SCHEDULE
C1	PROP. APPROX. 3″ ASPHALT CONCRETE SURFACE COURSE, TYPE S9.5B, AT AN AVERAGE RATE OF 168 LBS. PER SQ. YD. IN EACH OF TWO LAYERS.
C2	PROP. VAR. DEPTH ASPHALT CONCRETE SURFACE COURSE, TYPE S9.5B AT AN AVERAGE RATE OF 112 LBS. PER SQ. YD. PER 1″ DEPTH. TO BE PLACED IN LAYERS NOT TO EXCEED 2″ IN DEPTH.
E1	PROP. APPROX. 5″ ASPHALT CONCRETE BASE COURSE, TYPE B25.0B, AT AN AVERAGE RATE OF 570 LBS. PER SQ. YD.
E2	PROP. APPROX. 4″ ASPHALT CONCRETE BASE COURSE, TYPE B25.0B, AT AN AVERAGE RATE OF 456 LBS. PER SQ. YD.
E3	PROP. VAR. DEPTH ASPHALT CONCRETE BASE COURSE, TYPE B25.0B, AT AN AVERAGE RATE OF 114 LBS. PER SQ. YD. PER 1″ DEPTH. TO BE PLACED IN LAYERS NOT LESS THAN 3″ IN DEPTH OR GREATER THAN 5½″ IN DEPTH.
R	EXPRESSWAY GUTTER (NCDOT STD. DRAWING NO. 846.01)
T	EARTH MATERIAL
U	EXISTING PAVEMENT
W	PROPOSED WEDGING (SEE APPROPRIATE DETAILS)

NOTE: PAVEMENT EDGE SLOPES ARE 1:1 UNLESS SHOWN OTHERWISE

6/2/99
11/4/2016
S:\Transportation\31236-01 MTC 14SP.2022.1.1 Clay 86\Roadway\Proj\BD5114_Rdy_086_typ.dgn
USER: jmartell